Asterion

California Instruments Asterion AC Series

High Performance Programmable AC / DC Power Source

500 VA - 36000 VA
200 / 400 Vac
250 / 500 Vdc

Advanced Features

- High power density in 1U / 2U / 4U / 14U chassis up to 18kVA
- Intuitive touch panel control
- Innovative iX2™ current doubling technology
- Multi-language display for global operation
- Auto paralleling for higher power
- Single phase 1U models and 1 or 3 phase selectable 2U / 4U / 14U models
- Complete avionic test suites (optional)
- ATE version available in 1U, 2U and 4U models
- Standard LXI LAN, USB and RS232, optional GPIB

Performance. Reliance. Brilliance.

Inspired by the enduring power of a brilliant star, the California Instruments Asterion line of AC power sources by AMETEK Programmable Power combines intelligence and flexibility to create an advanced platform of AC solutions. This easy-to-configure design features sophisticated technology for delivering high performance, programmable AC and DC power. Its sleek design packs maximum power density into a low-profile form factor with an intuitive touch screen interface placing that power at your fingertips. Centralized control and unparalleled modularity make Asterion the most adaptable platform on the market. Its groundbreaking capabilities set the standard for affordable, precision power sources.

Maximize rack space utilization with leading AC power density in 1U/2U/4U chassis.

Employ full output power over widest voltage range with iX2™ technology.

Quickly and expertly control the AC source with intuitive touchscreen.

Control via Front Panel Touchscreen & Encoder or available digital control interfaces.

The Asterion AC Series is Digital Signal Processor (DSP) controlled and can be operated from the intuitive, easy to use front panel touchscreen or the Ethernet LXI, USB and RS232 standard control interfaces, as well as through the optional GPIB control interface.

The touchscreen function group icons include a Dashboard, Output Programing Parameters, Measurements, Sequencing, Configuration, Control Interfaces, Applications, and System Settings. Function selection and parameter entry can be achieved either by direct selection from the touchscreen or by using the encoder selector button. The control resolution is adjusted by a dynamic rate change algorithm that combines the benefits of precise control over small parameter changes with quick sweeps through the entire range.

Product Controls and Interfaces

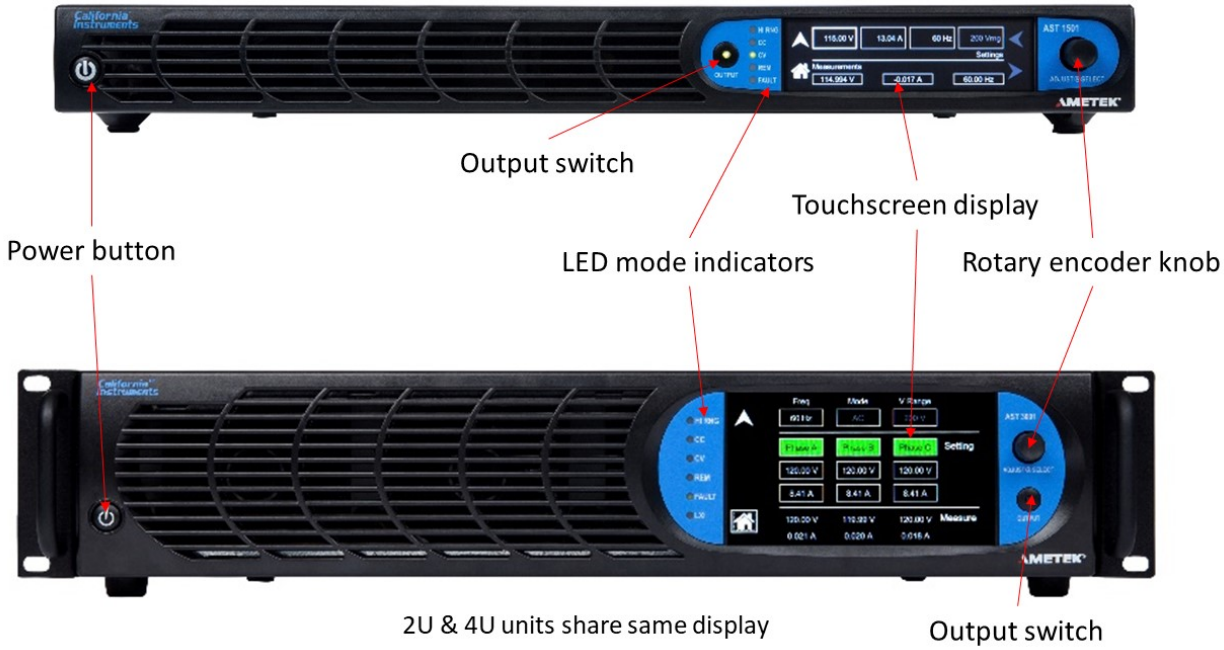

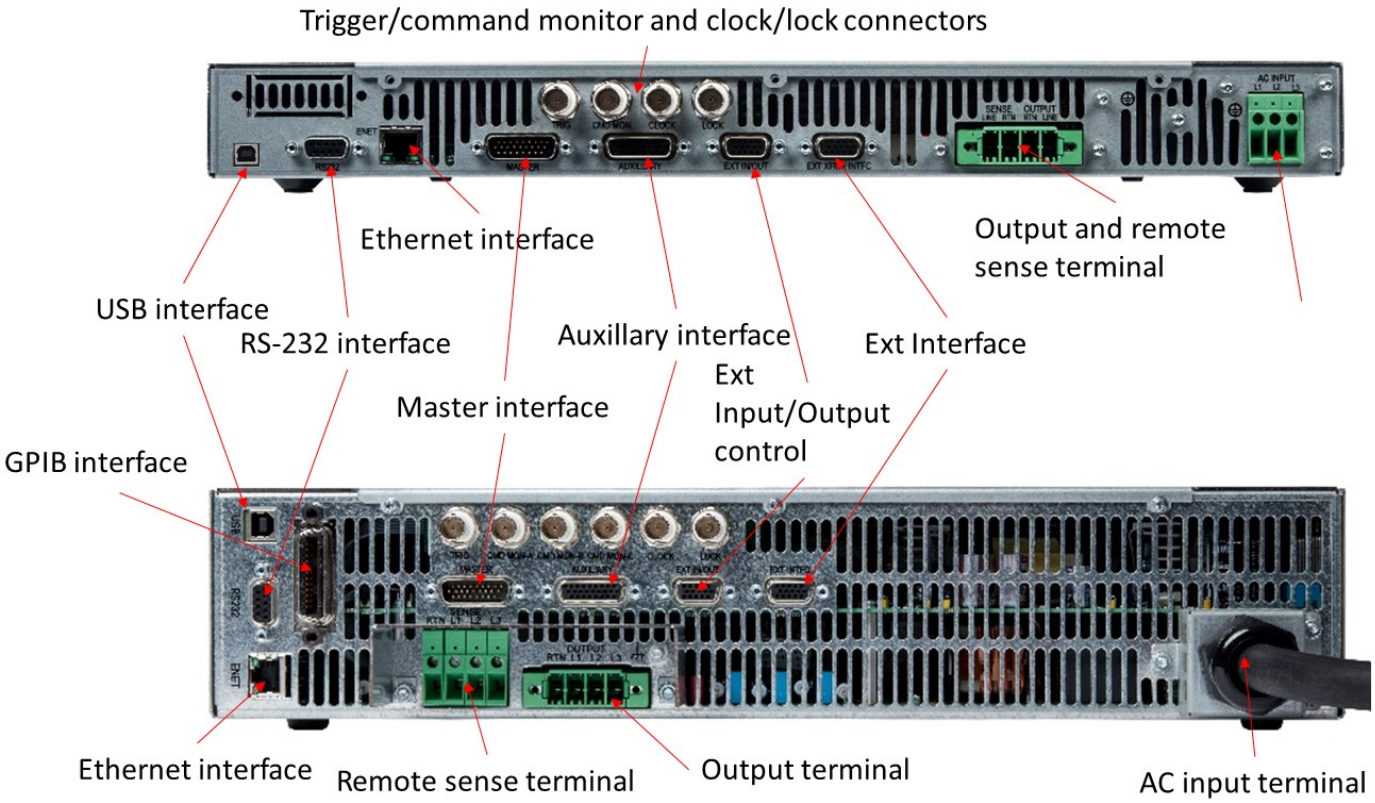

Product Controls and Interfaces (continued)

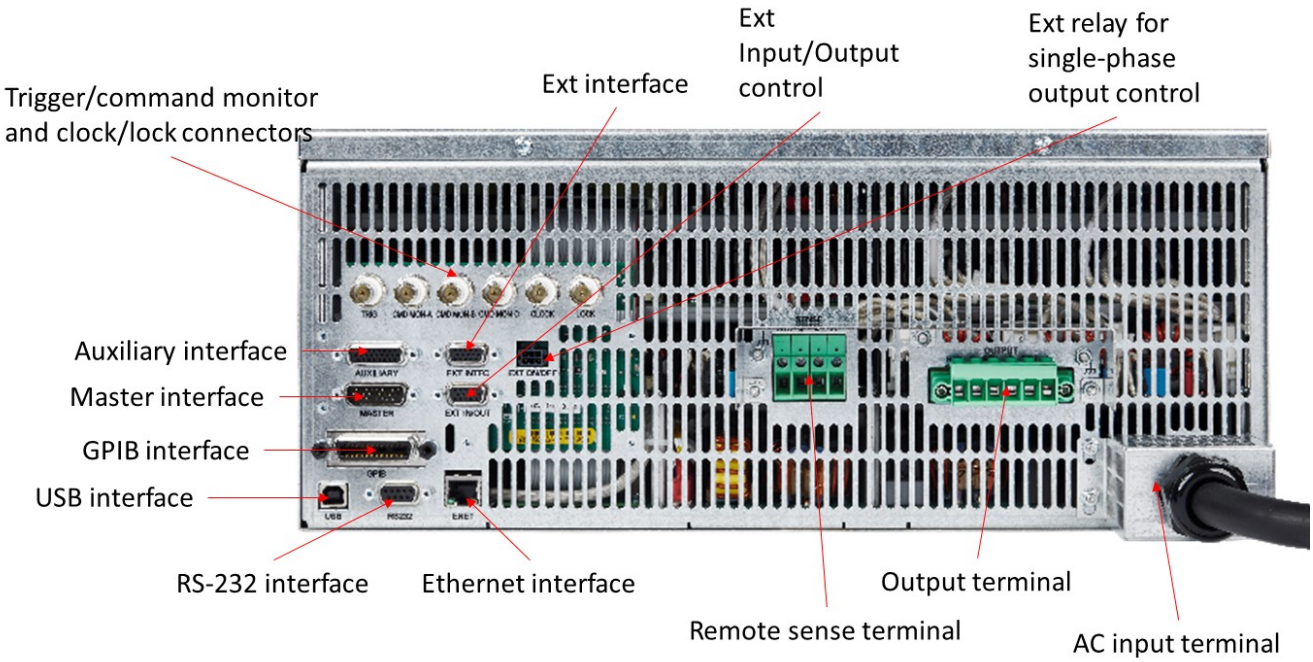

14U rear panel

Applications

The Asterion AC Series is designed for testing today's complex electronics, including avionics, telecommunications and commercial electronics requiring low profile, light weight power sources with high power density. Other applications include:

- Commercial and military avionics test
- AC power simulation
- Manufacturing and process control
- Frequency & voltage conversion
- IEC standards testing
- ATE applications

iX2™ Constant-Power Mode Output Characteristic

The iX2™ Constant-Power mode has an output characteristic where full rated output power is available from 50% of full-scale output voltage to 100% of full-scale output voltage, as depicted in the graphs of Figure 1 1 and Figure 1 2. The output current versus output voltage follows a constant-power relation where the output current would be 200% of the full-scale value when the output voltage is 50% of full scale. The current ratings are also a function of output frequency, as shown in Figure 1-1 for the AST 751, AST 1501, AST 2253, AST4503, AST6003, AST12K3, AST18K3 and AST 3001 (1-Phase) models above 500 Hz, and in Figure 1-2 for the AST 501, AST 1503, and AST 3003 (3-Phase) models above 1 kHz.

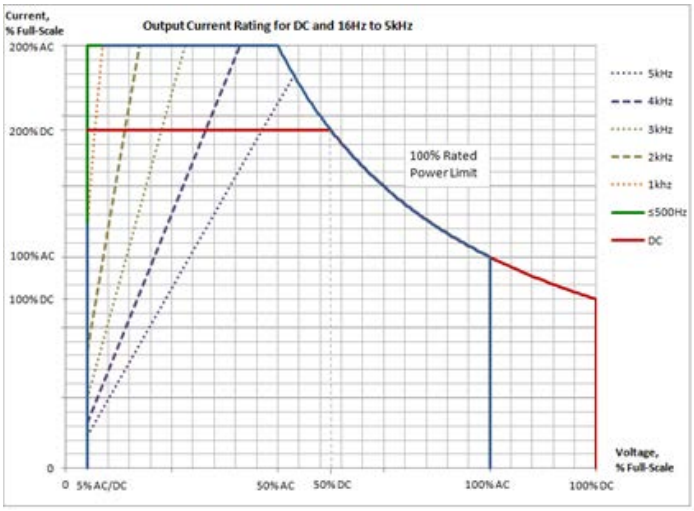

Figure 1-1. iX2™ Constant-Power: Output Current Versus Voltage, AST 751, AST 1501, AST 2253, AST 3003, AST 4503, AST 6003, AST12K3, AST18K3 (1-ph)

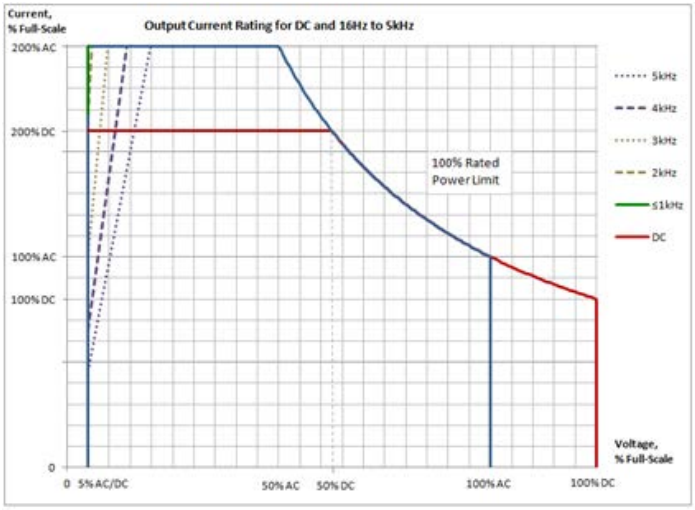

Figure 1-2. iX2™ Constant-Power: Output Current Versus Voltage, AST 501, AST 1503, AST 3003 (3-ph)

Asterion AC Virtual Panels (Graphical User Interface)

Virtual Panels allow remote control of the Asterion AC power source as well as programming communication and monitoring for the Asterion ATE model without front panel display.

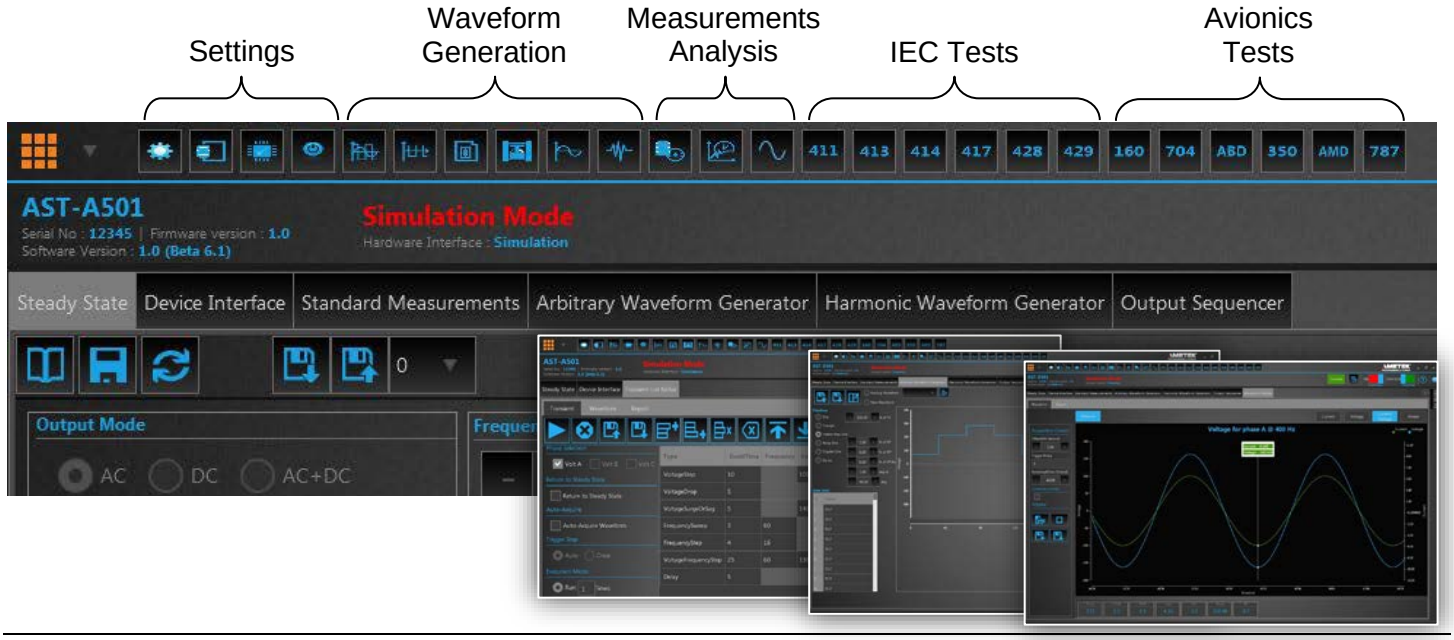

Specifications

AC/DC Output Specifications			
Model	**AST 501**	**AST 751**	**AST 1501**
Enclosure	1U	1U	1U
Output Phase	1-Phase	1-Phase	1-Phase
Output Power	500 VA/ 500 W	750 VA/ 750 W	1,500 VA/ 1,500 W; derate output power from 1,500 W at 103.5 VAC to 1,300 W at 90 VAC
AC and AC+DC Output Current, Full-Scale	Low-Range: 2.5 A (RMS) at 200 VAC. 5 A(1) (RMS) at 100 VAC High-Range: 1.25 A (RMS) at 400 VAC. 2.5 A(1) (RMS) at 200 VAC.	Low-Range: 3.75 A (RMS) at 200 VAC. 7.5 A(1) (RMS) at 100 VAC. High-Range: 1.88 A (RMS) at 400 VAC. 3.75 A(1) (RMS) at 200 VAC.	Low-Range: 7.5 A (RMS) at 200 VAC. 15.0 A(1) (RMS) at 100 VAC. High-Range: 3.75A (RMS) at 400 VAC. 7.5 A(1) (RMS) at 200 VAC.
DC Output Current, Full-Scale	Low-Range: 2.0 ADC at 250 VDC. 4.0 ADC(1) at 125 VAC. High-Range: 1.0 ADC at 500 VDC. 2.0 ADC(1) at 250 VAC.	Low-Range: 3.0 ADC at 250 VDC. 6.0 ADC(1) at 125 VAC High-Range: 1.5 ADC at 500 VDC. 3.0 ADC(1) at 250 VAC.	Low-Range: 6.0 ADC at 250 VDC. 12.0 ADC(1) at 125 VAC High-Range: 3.0 ADC at 500 VDC. 6.0 ADC(1) at 250 VAC
Model	**AST 1503**	**AST 2253**	**AST 3003**
Enclosure	2U	2U	2U
Output Phase	1-Phase/3-Phase	1-Phase/3-Phase	1-Phase/3-Phase
Output Power	1,500 VA/1,500 W; 500 W, maximum per phase; derate output power from 1,500 W at 103.5 VAC to 1,300W at 90 VAC.	2,250 VA/2,250 W; 750W, maximum per phase; derate output power from 1,900 W at 132 VAC to 1,300W at 90 VAC.	3,000 VA/ 3,000 W; 1,000 W, maximum per phase; derate output power from 3,000 W at 207 VAC to 2,600W at 180 VAC, and 1,900 W at 132 VAC to 1,300W at 90 VAC.
AC and AC+DC Output Current, Full-Scale, per phase	Low-Range: 2.5 A (RMS) at 200 VAC. 5.0 A(1) (RMS) at 100 VAC High-Range: 1.25 A (RMS) at 400 VAC. 2.5 A(1) (RMS) at 200 VAC 1-Phase mode: X3.	Low-Range: 3.75 A (RMS) at 200 VAC. 7.5 A(1) (RMS) at 100 VAC High-Range: 1.88 A (RMS) at 400 VAC. 3.75 A(1) (RMS) at 200 VAC 1-Phase mode: X3.	Low-Range: 5 A (RMS) at 200 VAC. 10.0 A(1) (RMS) at 100 VAC High-Range: 2.5A (RMS) at 400 VAC. 5 A(1) (RMS) at 100 VAC 1-Phase mode: X3.
DC Output Current, Full-Scale, per phase	Low-Range: 2.0 ADC at 250 VDC. 4.0 ADC(1) at 125 VDC High-Range: 1.0 ADC at 500 VDC. 2.0 ADC(1) at 250 VDC 1-Phase mode: X3.	Low-Range: 3.0 ADC at 250 VDC. 6.0 ADC(1) at 125 VDC High-Range: 1.5 ADC at 500 VDC. 3.0 ADC(1) at 250 VDC 1-Phase mode: X3.	Low-Range: 4.0 ADC at 250 VDC. 4.0 ADC(1) at 125 VDC High-Range: 2.0 ADC at 500 VDC. 4.0 ADC(1) at 250 VDC 1-Phase mode: X3.

Model	AST 4503	AST 6003	AST12K3
Enclosure	4U	4U	14U
Output Phase	1-Phase/3-Phase	1-Phase/3-Phase	1-Phase/3-Phase
Output Power	4,500 VA/4,500 W; 1500 W, maximum per phase;	6,000 VA/6,000 W; 2,000 W, maximum per phase;	12,000 VA/12,000 W; 4,000 W, maximum per phase;
AC and AC+DC Output Current, Full-Scale, per phase	Low-Range: 7.5 A (RMS) at 200 VAC. 15 A(1) (RMS) at 100 VAC High-Range: 3.75 A (RMS) at 400 VAC. 7.5 A(1) (RMS) at 200 VAC 1-Phase mode: X3.	Low-Range: 10 A (RMS) at 200 VAC. 15 A(1) (RMS) at 100 VAC High-Range: 5 (RMS) at 400 VAC. 10 A(1) (RMS) at 200 VAC 1-Phase mode: X3.	Low-Range: 20 A (RMS) at 200 VAC. 40 A(1) (RMS) at 100 VAC High-Range: 10 (RMS) at 400 VAC. 20 A(1) (RMS) at 200 VAC 1-Phase mode: X3.
DC Output Current, Full-Scale, per phase	Low-Range: 6 ADC at 250 VDC. 12 ADC(1) at 125 VDC High-Range: 3 ADC at 500 VDC. 6 ADC(1) at 250 VDC 1-Phase mode: X3.	Low-Range: 8 ADC at 250 VDC. 16 ADC(1) at 125 VDC High-Range: 4 ADC at 500 VDC. 8 ADC(1) at 250 VDC 1-Phase mode: X3.	Low-Range: 16 ADC at 250 VDC. 32 ADC(1) at 125 VDC High-Range: 8 ADC at 500 VDC. 16 ADC(1) at 100 VDC 1-Phase mode: X3.

Model	AST18K3		
Enclosure	14U		
Output Phase	1-Phase/3-Phase		
Output Power	18,000 VA/18,000 W; 6000 W, maximum per phase;		
AC and AC+DC Output Current, Full-Scale, per phase	Low-Range: 30 A (RMS) at 200 VAC. 60 A(1) (RMS) at 100 VAC High-Range: 15 A (RMS) at 400 VAC. 30 A(1) (RMS) at 200 VAC 1-Phase mode: X3.		
DC Output Current, Full-Scale, per phase	Low-Range: 24 ADC at 250 VDC. 48 ADC(1) at 100 VDC High-Range: 12 ADC at 500 VDC. 24 ADC(1) at 100 VDC 1-Phase mode: X3.		

(1) *Refer to "iX2™ Constant-Power Mode Output Characteristic" on Section* ***Error! Reference source not found.***

AC/DC Output Specifications Continued	
Model	**All Models**
Maximum RMS Output Current	200% of the full-scale RMS current at ≤50% of full-scale voltage. Refer to Figure 1-1 and Figure 1-2 for graphs of current rating as a function of output frequency.
iX2™ Constant-Power Mode	Constant-Power output capability in each output voltage range with full rated output power from 50% of full-scale output voltage to 100% of full-scale; the output current increases to 200% of rated current at 50% full-scale output voltage from 100% rated current at 100% of full-scale voltage. Refer to Figure 1-1 and Figure 1-2 for graphs of current rating as a function of output frequency.
AC and AC+DC Output Voltage, Full-Scale	Low-Range: 0 to 200 V(RMS); High-Range: 0 to 400 V(RMS)
DC Output Voltage, Full-Scale	Low-Range: 0 to 250 VDC; High-Range: 0 to 500 VDC
DC Offset Voltage, Typical	±20 mVDC, ≥40 Hz
Output Float Voltage	566 V(PK), maximum from either output terminal to chassis
Voltage Programming Accuracy	±(0.1% of actual + 0.2% of full-scale) for DC, and AC 16 Hz to 1 kHz; >1 kHz, add ±0.2% of full-scale/kHz; add ±0.1% of full scale for AC+DC mode. Valid from 5% of full-scale to 200 VAC(RMS)/250 VDC in low-range and 400 VAC(RMS)/500 VDC in high-range; with sense leads connected.
Voltage Resolution	≤0.02 V, AC, DC, and AC+DC mode
Voltage Temperature Coefficient, Typical	≤100 ppm/°C of full-scale
Voltage Stability, Typical	±0.1% of full-scale over 8 hours; with constant line, load, and temperature; with sense leads connected
Voltage Distortion	0.25% maximum, 16 Hz to 100 Hz; 0.5% maximum, >100Hz to 500 Hz; and 1% maximum, >500 Hz to 1 kHz, plus 1%/kHz to 5 kHz; with full linear load or no load
Voltage Slew Rate, Typical	≥10 V/µs with full-scale programmed voltage step
Current Programming Range	Programmable from zero to 200% of full-scale rating in each output range. Refer to Figure 1-1 and Figure 1-2 for graphs of current rating as a function of output frequency.
Current Programming Accuracy	± (0.3% of actual + 0.5% of full-scale) for DC, and AC 16 Hz to 1.2 kHz; add ±0.1% of full-scale for AC+DC mode. Valid from 5% of full scale to 100% of full-scale. HF option: for High-Range, add 1.2% of maximum/kHz; for Low Range, add 0.1% of maximum/kHz; Valid from 20% of full-scale to 200% of full-scale.
Line Regulation	±0.015% of full-scale voltage, for a ±10% input line change; DC, or 40 Hz to 5 kHz.
Load Regulation	±0.025% of full-scale voltage, for 100% of rated resistive load change; DC, or 40 Hz to 1 kHz, above 1 kHz, add ±0.015% of full-scale/kHz

AC/DC Output Specifications Continued	
Model	**All Models**
Voltage and Current Programming Overrange, Typical	**1% of full-scale**
Noise Level, Typical	**AC output: 450 mV(RMS), low-range; 750 mV(RMS), high-range; at ≥40 Hz output frequency; bandwidth, 20 kHz to 1 MHz; DC output: 400 mV(RMS), low-range; 700 mV(RMS), high-range; bandwidth, 20 Hz to 1 MHz.**
Remote Sense	**5 V(RMS), maximum total output lead drop**
Crest Factor	**AST 751, AST 1501, AST 3001, AST 2253, AST 4503, AST 6003, AST12K3, AST18K3: 5:1 of full-scale current in each output range (ratio of peak output current to RMS full scale output current). AST 501, AST 1503, AST 3003: 7:1 of full-scale current in each output range (ratio of peak output current to RMS full scale output current).**
Power Factor	**0, lagging to 0, leading**
Frequency Range	**Standard models: DC, and 16 Hz to 1.2 kHz; LF option: DC, and 16 Hz to 550 Hz; HF option: DC, and 16 Hz to 5 kHz**
Frequency Accuracy	**Standard models: ±(0.01% of actual + frequency resolution/2); FC option: ±0.25%.**
Frequency Resolution	**0.01 Hz resolution, 16-81.91 Hz; 0.1 Hz resolution, 82-819.1 Hz; 1 Hz resolution, 820-5000 Hz; with LKM/LKS option: 1 Hz resolution, 16-5000 Hz.**
Frequency Temperature Coefficient, Typical	**10 ppm/ºC of full-scale in each range**
Phase Programming Range	**0.0 º to 360.0 º, relative to external synchronization signal; in multi-phase group, Auxiliary unit output voltage is relative to the Master unit output voltage, with the Master unit as reference 0°.**
Phase Accuracy	**±1º, 16 Hz to 100 Hz; ±2º >100 Hz to 1.2 kHz, plus ±1º/kHz above 1.2 kHz**
Phase Programming Resolution	**±0.4º**

AC Input Specifications			
Model	**AST 501**	**AST 751**	**AST 1501**
Enclosure	1U	1U	1U
Input Voltage, Nominal Rating	100VAC-120VAC/ 200-240 VAC; 1-Phase and 3-Phase, line-neutral or line-line .	100VAC-120VAC/ 200-240 VAC; 1-Phase and 3-Phase, line-neutral or line-line.	100VAC-120VAC/ 200-240 VAC; 1-Phase and 3-Phase, line-neutral or line-line.
Input Voltage, Operating Range	90-132 VAC/ 180VAC-264VAC	90-132 VAC/ 180VAC-264VAC	90-132 VAC/ 180VAC-264VAC; refer to output power section for derating as a function of input voltage.
Input Current, Maximum with 1-Phase Input	7.6 A(RMS) at 90 VAC	11 A(RMS) at 90 VAC	20 A(RMS) at 90 VAC to 103.5 VAC
Input Current, Maximum with 3-Phase Input	4.4 A(RMS) at 90 VAC	6.5 A(RMS) at 90 VAC	13 A(RMS) at 90 VAC

AC Input Specifications Continued			
Model	**AST 1503**	**AST 2253**	**AST 3003**
Enclosure	2U	2U	2U
Input Voltage, Nominal Rating	100VAC-120VAC/ 200-240 VAC; 1-Phase and 3-Phase, line-neutral or line-line .	100VAC-120VAC/ 200-240 VAC; 1-Phase and 3-Phase, line-neutral or line-line.	100VAC-120VAC/ 200-240 VAC; 1-Phase and 3-Phase, line-neutral or line-line.
Input Voltage, Operating Range	90-132 VAC/ 180VAC-264VAC; refer to output power section for derating as a function of input voltage.	90-132 VAC/ 180VAC-264VAC; refer to output power section for derating as a function of input voltage.	90-132 VAC/ 180VAC-264VAC; refer to output power section for derating as a function of input voltage.
Input Current, Maximum with 1-Phase Input	20 A(RMS) at 90 VAC to 103.5 VAC;	20 A(RMS) at 90 VAC to 132 VAC; 15 A(RMS) at 180 VAC.	20 A(RMS) at 90 VAC to 132 VAC; 20 A(RMS) at 180 VAC to 207 VAC.
Input Current, Maximum with 3-Phase Input	13 A(RMS) at 90 VAC to 103.5 VAC, line-to line	10 A(RMS) at 180 VAC, line-to line	13 A(RMS) at 180 VAC, line-to line

Model	**AST 4503**	**AST 6003**	**AST 12K3**
Enclosure	4U	4U	14U
Input voltage type (Only factory configurable)	3 Phase, 3 Wire + Ground (or) 3 Phase + Neutral (4 wire + Ground)	3 Phase, 3 Wire + Ground (or) 3 Phase + Neutral (4 wire + Ground)	3 Phase, 3 Wire + Ground (or) 3 Phase + Neutral, 4 wire + Ground
Input Voltage, Nominal Rating for 3-phase, 3 Wire + Ground input	200/208/240 VAC, 3 Phase, Line - Line	200/208/240 VAC, 3 Phase, Line - Line	200/208/240 VAC, 3 Phase, Line - Line
Input Voltage, Operating range for 3-phase, 3 Wire + Ground input	180 - 264 VAC, 3 Phase, Line - Line	180 - 264 VAC, 3 Phase, Line - Line	180 - 264 VAC, 3 Phase, Line - Line
Input Voltage, Nominal Rating for 3-phase + Neutral, 4 Wire + Ground input	380 VAC/ 400 VAC/ 415 VAC, 3 Phase, Line-Line) (220 VAC/ 230 VAC/240 V AC, 3 Phase, Line – Neutral)	380 VAC/ 400 VAC/ 415 VAC, 3 Phase, Line-Line) (220 VAC/ 230 VAC/240 V AC, 3 Phase, Line – Neutral)	380 VAC/ 400 VAC/ 415 VAC, 3 Phase, Line-Line) (220 VAC/ 230 VAC/240 V AC, 3 Phase, Line – Neutral)
Input Voltage, Operating range for 3-phase + Neutral, 4 Wire + Ground input	342 V AC to 457 VAC Line-Line (198 VAC – 264 V AC, 3 Phase, Line – Neutral)	342 V AC to 457 VAC Line- Line (198 VAC – 264 V AC, 3 Phase, Line – Neutral)	342 V AC to 457 VAC Line- Line (198 VAC – 264 V AC, 3 Phase, Line – Neutral)
Input Current, Maximum with 3-Phase Input, 3 Wire+ ground	20 A (RMS) at 180 VAC	28 A (RMS) at 180 VAC	56 A (RMS) at 180 VAC
Input Current, Maximum with 3-Phase + Neutral Input, 3 Wire + Ground	11 A (RMS) at 342 VAC to 457 VAC;	14 A (RMS) at 342 VAC to 457 VAC	28 A (RMS) at 342 VAC to 457 VAC

AC Input Specifications Continued			
Model	**AST 18K3**		
Enclosure	14U		
Input voltage type (Only factory configurable)	3 Phase, 3 Wire + Ground (or) 3 Phase + Neutral, 4 wire + Ground		
Input Voltage, Nominal Rating for 3-phase, 3 Wire + Ground input	200/208/240 VAC, 3 Phase, Line - Line		
Input Voltage, Operating range for 3-phase, 3 Wire + Ground input	180 - 264 VAC, 3 Phase, Line - Line		
Input Voltage, Nominal Rating for 3-phase + Neutral, 4 Wire + Ground input	380 VAC/ 400 VAC/ 415 VAC, 3 Phase, Line-Line) (220 VAC/ 230 VAC/240 V AC, 3 Phase, Line – Neutral)		
Input Voltage, Operating range for 3-phase + Neutral, 4 Wire + Ground input	342 V AC to 457 VAC Line-Line (198 VAC – 264 V AC, 3 Phase, Line – Neutral)		
Input Current, Maximum with 3-Phase Input, 3 Wire+ ground	64 A (RMS) at 180 VAC		
Input Current, Maximum with 3-Phase + Neutral Input, 3 Wire + Ground	42 A (RMS) at 342 VAC to 457 VAC;		

AC Input Specifications Continued	
Model	**All Models**
Input Frequency, Nominal Rating	a) 50 Hz, 60 Hz, 400 Hz for 1U, 2U and 4U Models 50 Hz, 60 Hz for 14U models
Input Frequency Range	a) 47-440 Hz for 1U, 2U and 4U Models 47- 63 Hz for 14U Models
Inrush Current, typical	a) 30 A (PK) at 264 VAC Line-Line for 1U and 2U Models b) 55 A (PK) at 264 V AC Line-Line for 3-Phase, 3 wire + Ground input 4U Models c) 55 A (PK) at 457 V AC Line-Line for 3-Phase, 4 wire + Ground input 4U Models d) 165 A (PK) at 264 V AC Line-Line for 3-Phase, 3 wire + Ground input 14U Models e) 165 A (PK) at 264 V AC Line-Line for 3-Phase, 4 wire + Ground input 14U Models
Efficiency[1], typical	75%
Power Factor[2], typical	a) 1-Ph: 0.98; active PFC; 3-Ph: 0.95, active PFC for 1U and 2U Models b) 3-Ph: 0.95, active PFC for 4U and 14U Models
Hold-Up Time[3], typical	≥10 ms
Isolation Voltage	2200 VAC, input to output; 1350 VAC, input to chassis

[1] a) At full load and DC or 16 Hz to 1.2 kHz output frequency, with AC input voltage of 115 V(RMS) or 230 V(RMS), and 50/60 Hz input frequency for 1U and 2U Models
b) At full load and DC or 16 Hz to 1.2 kHz output frequency, with AC input voltage of 208 V(RMS) and 50/60 Hz input frequency for 4U and 14U 3 phase, 3 wire + Ground input type Models
c) At full load and DC or 16 Hz to 1.2 kHz output frequency, with AC input voltage of 400 V(RMS) and 50/60 Hz input frequency for 4U and 14U 3 phase + Neutral, 3 wire + Neutral + Ground input type Models

[2] a) At full load, with AC input voltage of 115 V(RMS) or 230 V(RMS), and 50/60 Hz input frequency for 1U and 2U Models
b) At full load and with AC input voltage of 208 V(RMS) and 50/60 Hz input frequency for 4U and 14U 3 phase, 3 wire + Ground input type Models
c) At full load and with AC input voltage of 208 V(RMS) and 50/60 Hz input frequency for 4U and 14U 3 phase + Neutral, 3 wire + Neutral + Ground input type Models

[3] a) At full load, with AC input voltage of 115 V(RMS) or 230 V(RMS), and 50/60 Hz input frequency for 1U and 2U Models
b) At full load and with AC input voltage of 208 V(RMS) and 50/60 Hz input frequency for 4U and 14U 3 phase, 3 wire + Ground input type Models
c) At full load and with AC input voltage of 400 V(RMS) and 50/60 Hz input frequency for 4U and 14U 3 phase + Neutral, 3 wire + Neutral + Ground input type Models

Output Measurements	
Parameter	**Specification**[1]
Voltage Range, Full-Scale	AC, DC and AC+DC output: 0-500 V
Voltage Accuracy	±(0.1% of actual + 0.2% of full-scale), add ±0.2% of full-scale/kHz for AC 16 Hz to 1 kHz; >1 kHz; add ±0.1% of full-scale for AC+DC mode. Valid from 5% to 100% of full-scale with sense leads connected.
Voltage Resolution	20 mV; 25 mV (DC)
Current Range, Maximum	AST 501, AST 751: ± 0-7.5 A(RMS); AST 1501: ± 0-15 A(RMS); AST 1503, AST 2253: ± 0-7.5 A(RMS) per phase; AST 3003, AST 4503: ± 0-15 A(RMS) per phase; AST 3001: ± 0-30 A(RMS); AST 6003: ± 0-22.5 A(RMS) per phase AST 12K3: ± 0-45 A(RMS) per phase AST 18K3: ±0-67.5 A(RMS) per phase 1 Phase Output Mode in 3 Phase Modes: Rating times 3
Current Accuracy	±(0.3% of actual + 0.5% of maximum) add ±0.3% of maximum/kHz for AC 16 Hz to 1 kHz; >1 kHz; add ±0.1% of maximum for AC+DC mode. Valid from 5% of full-scale to 100% of full-scale.
Current Resolution	2 mA; 1-phase mode in 3-phase models: 6 mA.
Peak Current Range, Maximum	AST 501, AST 751: ± 0-37.5 A(PK); AST 1501: ± 0-75 A(PK); AST 1503, AST 2253: ± 0-37.5 A(PK) per phase; AST 3003, AST 4503: ± 0-75 A(PK) per phase; AST 3001: ± 0-150 A(PK); AST 6003: ± 0-112.5 A(PK) per phase AST 12K3: ± 0-225 A(PK) per phase AST 18K3: ± 0-337.5 A(PK) per phase 1 Phase Output Mode in 3 Phase Modes: Rating times 3
Peak Current Accuracy	±(0.5% of actual + 0.5% of maximum), add ±0.3% of maximum/kHz for AC 16 Hz to 1 kHz; >1 kHz; add ±0.1% of maximum for AC+DC mode. Valid from 5% of full-scale to 100% of full-scale.
Peak Current Resolution	5 mA; 1-phase mode in 3-phase models: 15 mA.
Frequency Range	16 Hz to 5.0 kHz
Frequency Accuracy	±(0.01% of actual + frequency resolution/2)
Frequency Resolution	0.01 Hz: 16-81.91 Hz; 0.1 Hz: 82.0-819.1 Hz; 1 Hz: 820-5.0 kHz
Phase Range	0-360°
Phase Accuracy	±1°, 16 Hz to 100 Hz; ±2°, >100 Hz to 1 kHz; ±5°, >1 kHz
Phase Resolution	0.1°, 16-100 Hz; 1°, >100 Hz to 5 kHz
Real Power Range, Full-Scale	0-1.5 kW; 1-phase mode in 3-phase models: 4.5 kW.
Real Power Accuracy	±(0.4% of actual + 0.7% of full-scale) for AC 16 Hz to 1 kHz; >1 kHz, add ±0.4% of full-scale/kHz; add ±0.2% of full-scale for AC+DC mode.
Real Power Resolution	1 W; 1-phase mode in 3-phase models: 3 W.
Apparent Power, Full-Scale	0-1.5 kVA; 1-phase mode in 3-phase models: 4.5 kVA.
Apparent Power Accuracy	±(0.4% of actual + 0.7% of full-scale), add ±0.4% of full-scale/kHz for AC 16 Hz to 1 kHz; >1 kHz; add ±0.2% of full-scale for AC+DC mode.
Apparent Power Resolution	1 VA; 1-phase mode in 3-phase models: 3 VA.
Power Factor Range	0-1
Power Factor Accuracy	±2% of full-scale
Power Factor Resolution	0.01

[1]Accuracy specifications apply above 100 counts of resolution; for multi-chassis configurations, multiply the output current and power, and their accuracy specifications, by the number of chassis; power factor accuracy applies for PF > 0.5 and output apparent power > 50% of maximum rating; frequency measurement specifications valid for output voltage >5% of full-scale.

Harmonic Measurement	
Parameter	**Specification**
Frequency, Fundamental	16-81.91 Hz, 82.0-819.1 Hz, 820-960 Hz
Fundamental Frequency Resolution	0.01 Hz: 16-81.91 Hz; 0.1 Hz: 82.0-819.1 Hz; 1 Hz: 820-960 Hz
Harmonic Frequency	32 Hz to 48 kHz; 2nd to 50th harmonic
Fundamental Voltage Accuracy	±(0.2% of actual + 0.3% of full-scale) for 16 Hz to 960 Hz..
Fundamental Voltage Resolution	20 mV
Harmonic Voltage Accuracy	±(0.2% of actual + 0.3% of full-scale + 0.3% of full-scale/kHz).
Harmonic Voltage Resolution	20 mV
Fundamental Current Accuracy	±(0.4% of actual + 0.4% of full-scale) for 16 Hz to 960 Hz.
Fundamental Current Resolution	2 mA; 1-phase mode in 3-phase models: 6 mA.
Harmonic Current Accuracy	±(0.4% of actual + 0.6% of full-scale + 0.4% of maximum/kHz).
Harmonic Current Resolution	2 mA; 1-phase mode in 3-phase models: 6 mA.

Protection Functions	
Output Overvoltage Protection (OVP)	Programmable to 115% of full-scale output voltage; exceeding OVP threshold results in shutdown of output.
Output Current Limit Protection	User-selectable constant-current mode or current-limit mode, with programmable current setpoint; in constant-current mode, output current is regulated to setpoint; in current limit mode, exceeding current-limit setpoint results in shutdown of output; current limit delay: programmable from 100 ms to 10s.
Output Short-Circuit Protection	Instantaneous and RMS current limit
AC Input Overcurrent Protection	Internal fuses in each phase for fault isolation; not user replaceable
AC Input Undervoltage Protection	Automatic shutdown for insufficient AC input voltage
AC Input Transient Protection	Protection to withstand EN61326-1, Class-A surge levels
Overtemperature Protection (OTP)	Internal temperature monitors cause shutdown of output if temperature thresholds are exceeded

Environmental	
Parameter	**Specification**
Operating Temperature	0°C to 40°C (32° F to 104° F)
Storage Temperature	-40°C to 85°C (-40°F to 185° F)
Altitude	2000 m (6,562 ft)
Relative Humidity	5-95 %, non-condensing
Vibration	MIL-PRF-28800F, Class 3; 5-500 Hz per Paragraph 4.5.5.3.1.
Shock	MIL-PRF-28800F, Class 3; 30G half-sine with 11ms duration per Paragraph 4.5.5.4.1.
Transportation Integrity	ISTA Test Procedure 1A

Mechanical	
Parameter	**Specification**
1U Dimensions	H, 1.75” (44.45 mm); W (front panel), 19.0” (483 mm); D, 23.0” (584 mm); H, 1.75” (44.45 mm); W (chassis), 16.9” (429 mm); D, 23.0” (584 mm).
2U Dimensions	H, 3.47” (88.1 mm); W (front panel), 18.9” (480 mm); D, 23.0” (584 mm); H, 3.47” (88.1 mm); W (chassis), 16.9” (429 mm); D, 23.0” (584 mm).
4U Dimensions	H, 6.97” (177 mm); W (front panel), 18.9” (480 mm); D, 23.0” (584 mm); H, 6.97” (177 mm); W (chassis), 16.9” (429 mm); D, 23.0” (584 mm).
14U Dimensions	H, 24.5” (622 mm); W (front panel), 19.5” (495 mm); **D, 29.6” (752 mm)**
14U Dimensions (With Castor wheels)	H, 28.5” (724 mm); W (front panel), 19.5” (495 mm); **D, 29.6” (752 mm)**
1U Unit Weight	AST 501/751: 19 lb / 8.6 kg; AST 1501: 22 lb / 10 kg.
2U Unit Weight	AST 1503/2253: 39 lb / 17.7 kg; AST 3003: 48 lb / 21.8 kg.
4U Unit Weight	AST 6003, 104 lb / 47.2 kg; AST 4503, 87 lb / 39.5 kg;
14U Unit weight	AST 12K3, 270 lb / 123 kg; AST 18K3, 400 lb / 182 kg;
1U Shipping Weight	AST 501/751: 29 lb / 63.8kg; AST 1501: 32 lb / 70.4 kg.
2U Shipping Weight	AST 1503, 43 lb / 19.5 kg; AST 2253: 45 lb / 20.4 kg; AST 3001: 48 lb / 21.8 kg; AST 3003: 54 lb / 24.5 kg.
4U Shipping Weight	AST 6003, 104 lb / 47.2 kg; AST 4503, 93 lb / 42.2 kg;
14U Shipping Weight	AST 12K3, xxx lb / xxx kg; AST 18K3, xxx lb / xxx kg;

Regulatory Compliance	
Parameter	**Specification**
EMC	CE marked for EMC Directive 89/336/EEC per EN61326-1:2013, Class-A for emissions and immunity as required for the EU CE Mark.
Safety	CSA NRTL certified for US and Canada to CAN/CSA-C22.2 No. 61010-1-12, UL 61010-1 Third Edition. CE marked for LVD compliance 2006/95/EC to EN 61010-1 Third Edition as required for the EU CE mark.
CE Mark LVD Categories	Installation Overvoltage Category: II; Pollution Degree: 2; Class II equipment; indoor use only.
RoHS	CE marked for compliance with EU Directive 2011/65/EU for Restriction of Hazardous Substances in Electrical and Electronic Equipment.

Firmware / Software Options	
Option[1]	**Description**
B787	Avionics Electrical Power Quality Test Software; Boeing 787B3-0147 A/B/C (B787).
AMD	Avionics Electrical Power Quality Test Software; Airbus AMD24 C (A400M).
B787 & AMD	Includes both B787 and AMD options.
AVSTD	Avionics Electrical Power Quality Test Software Package; includes 160 (RTCA/DO160 E/F/G), 704 (MIL-STD 704 A/B/C/D/E/F), ABD (Airbus ADB100.1.8 D/E), A350 (Airbus ADB100.1.8.1 B/C).
AVALL	Avionics Electrical Power Quality Test Software Package; includes AVSTD, B787, AMD.
1399	MIL-STD-1399-300B shipboard power test software.
411	IEC 61000-4-11 voltage dips and interruptions EMC test software.
413	IEC 61000-4-13 harmonics and Inter-harmonics EMC test hardware and software.
411 & 413	Includes both 411 and 413 options.
MC	Options are installed in all chassis of a multi-chassis (MC) configuration.
[1]For Avionics options, reference the Avionics Software Manual (P/N 4994-971) for test details. All options require the use of the provided Asterion Virtual Panels, graphical user interface Windows application software (reference CD ROM CIC496).	

Warranty Statement:

AMETEK Programmable Power Inc. warrants its products to be free from defects in material and workmanship. The warranty period is from the date of original shipment of the product to the original purchaser (see website for warranty periods by product). As of 10/1/19, all Asterion AC units come with an industry-leading five (5) year warranty. Extended warranties available and an enhanced Warranty+ option on new purchases is also available. Consult with your local sales representative to learn more.

Chassis Dimension Drawings (1U)

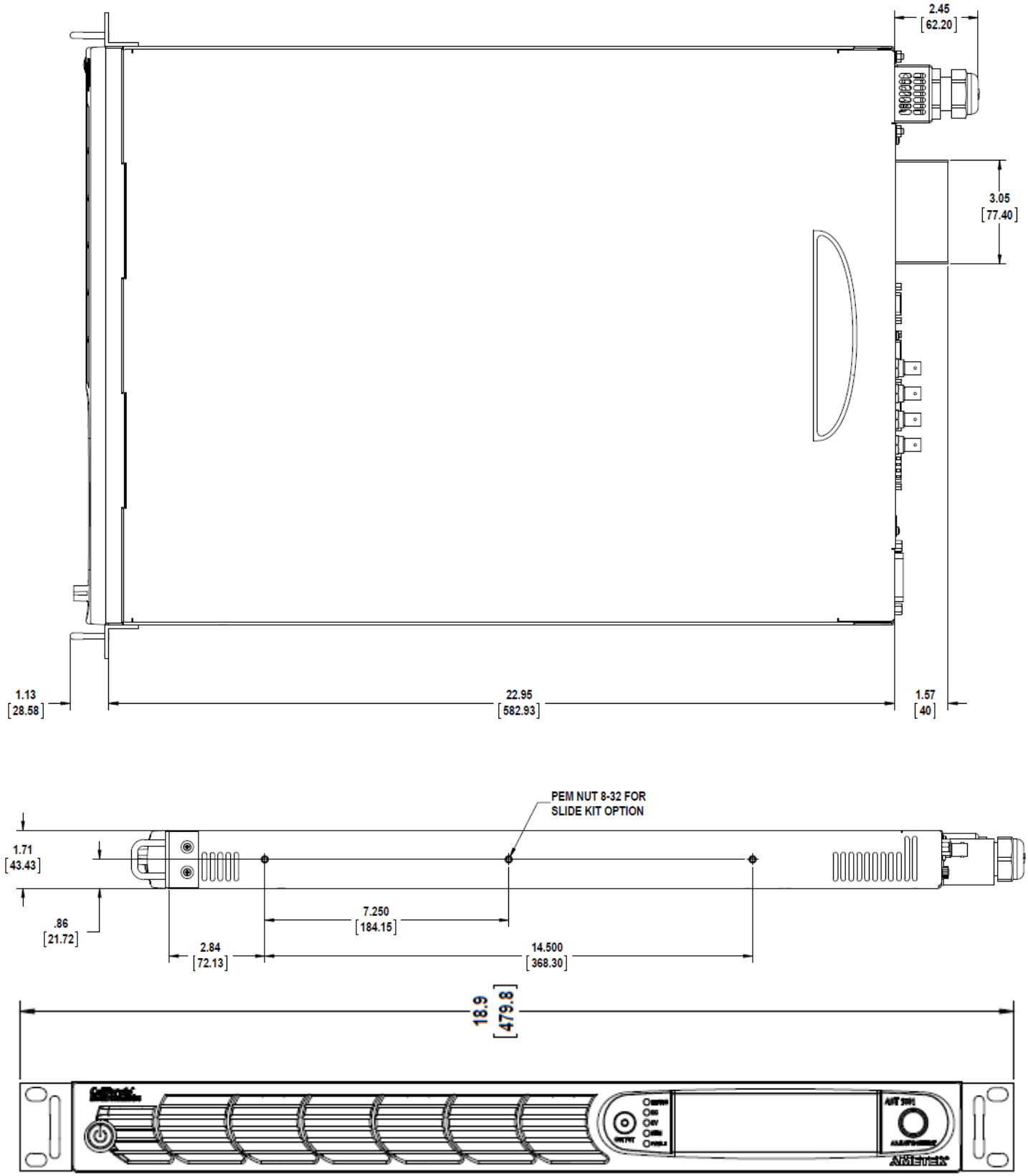

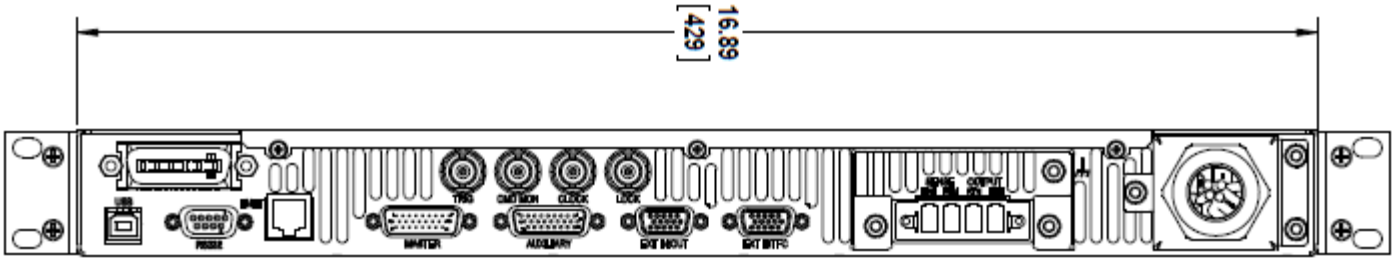

Chassis Dimension Drawings (2U)

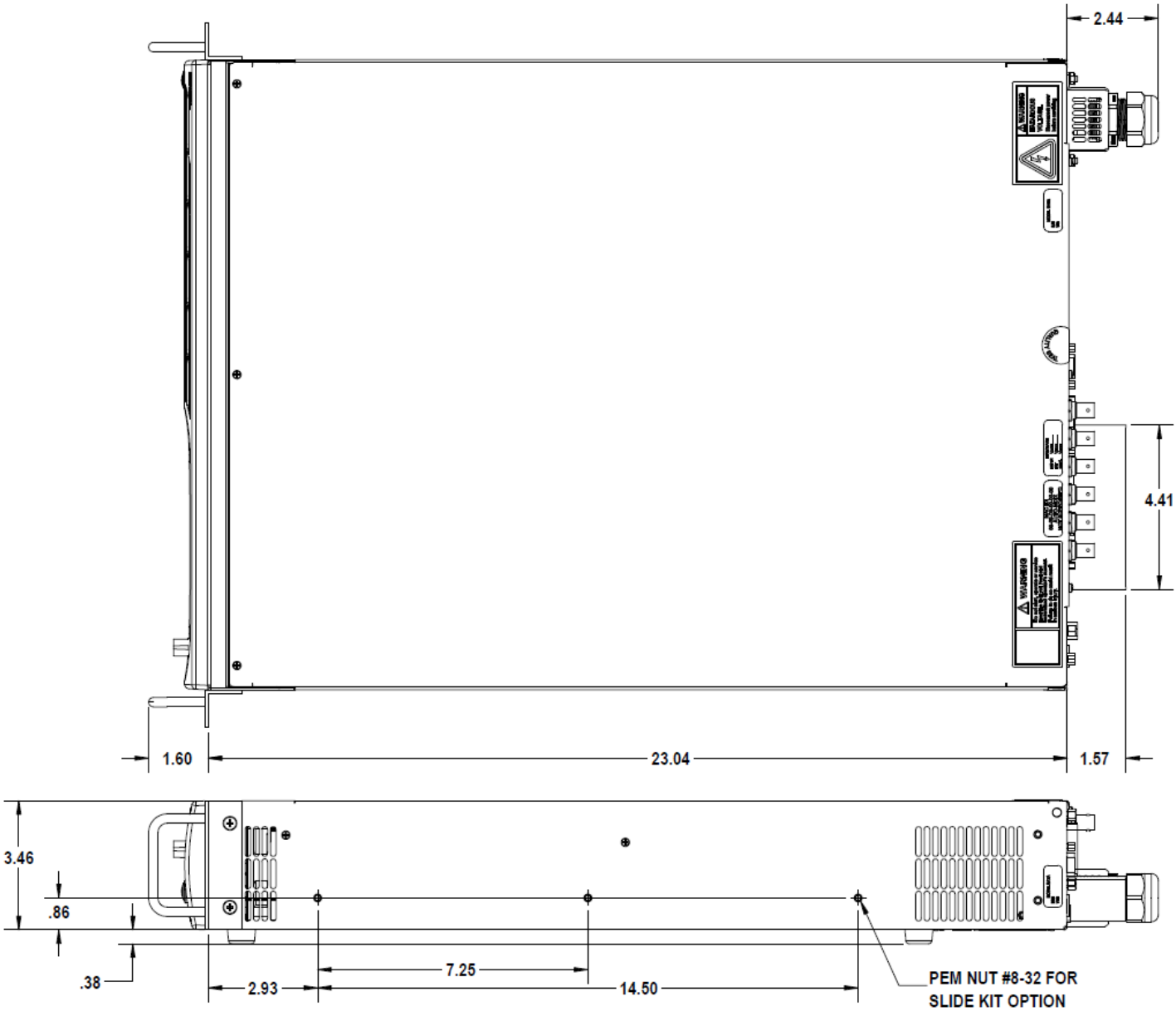

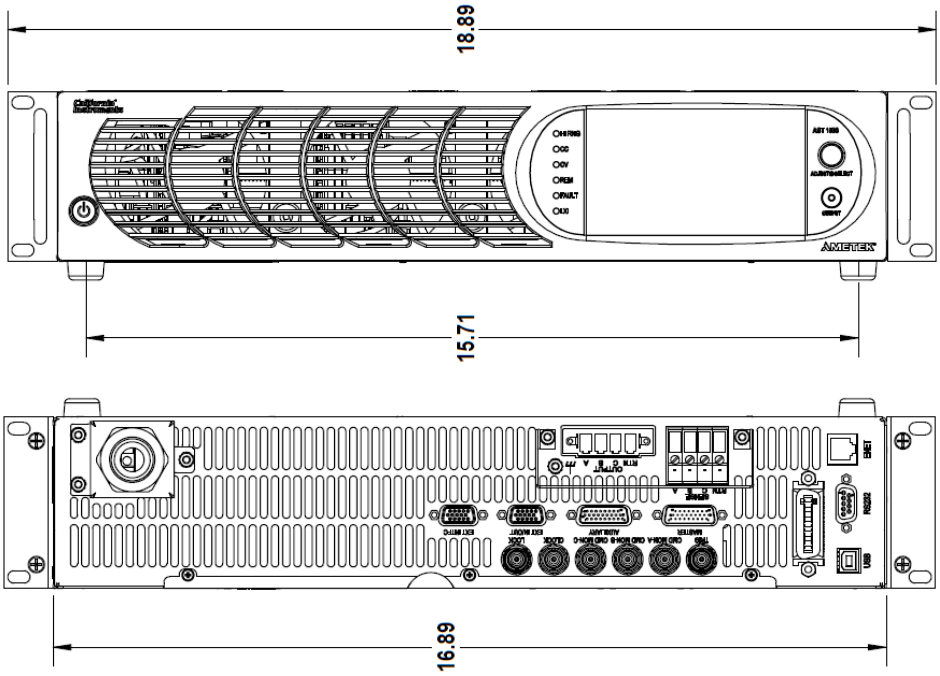

Chassis Dimension Drawings (14U)

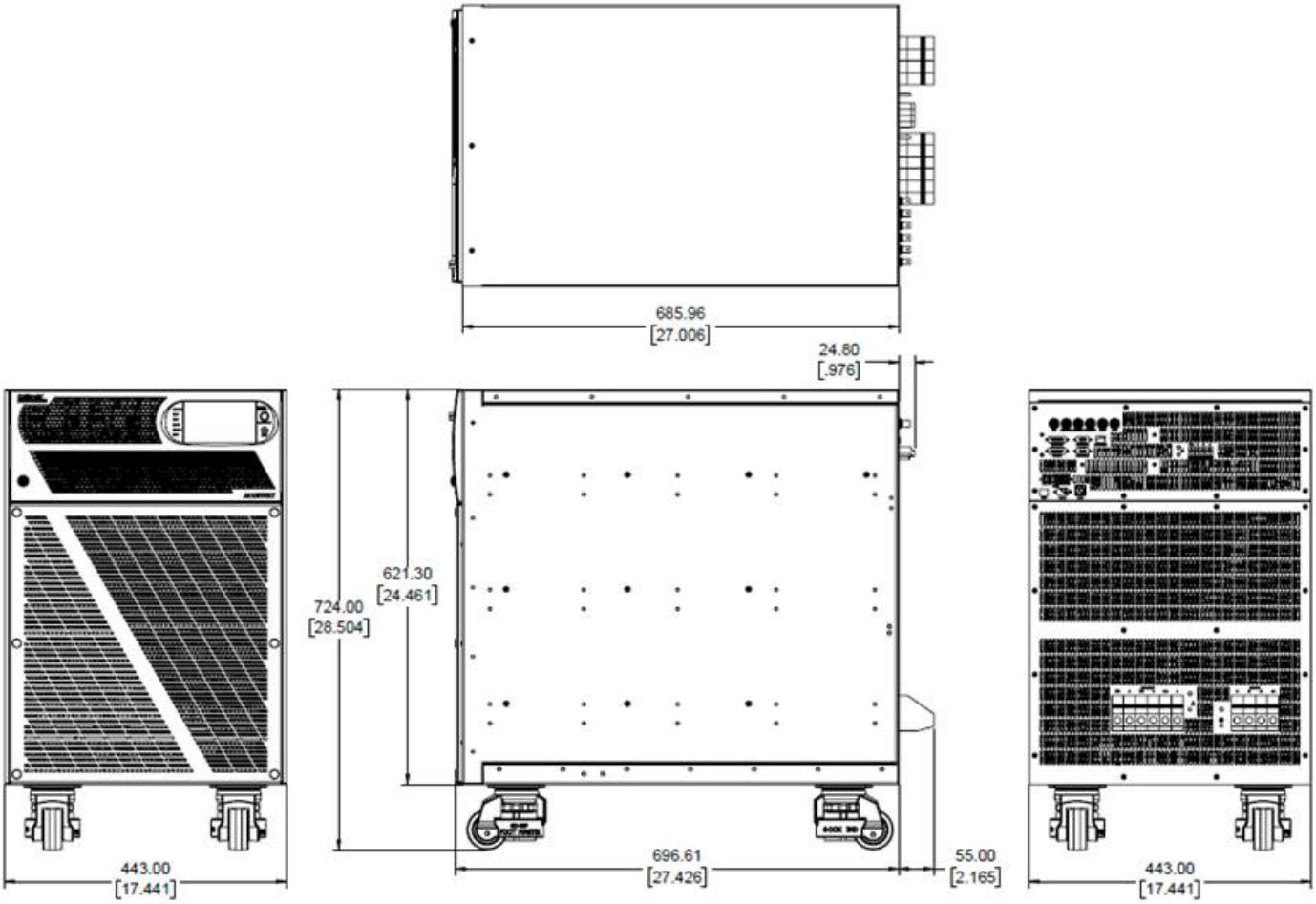

Chassis Dimension Drawings (4U)

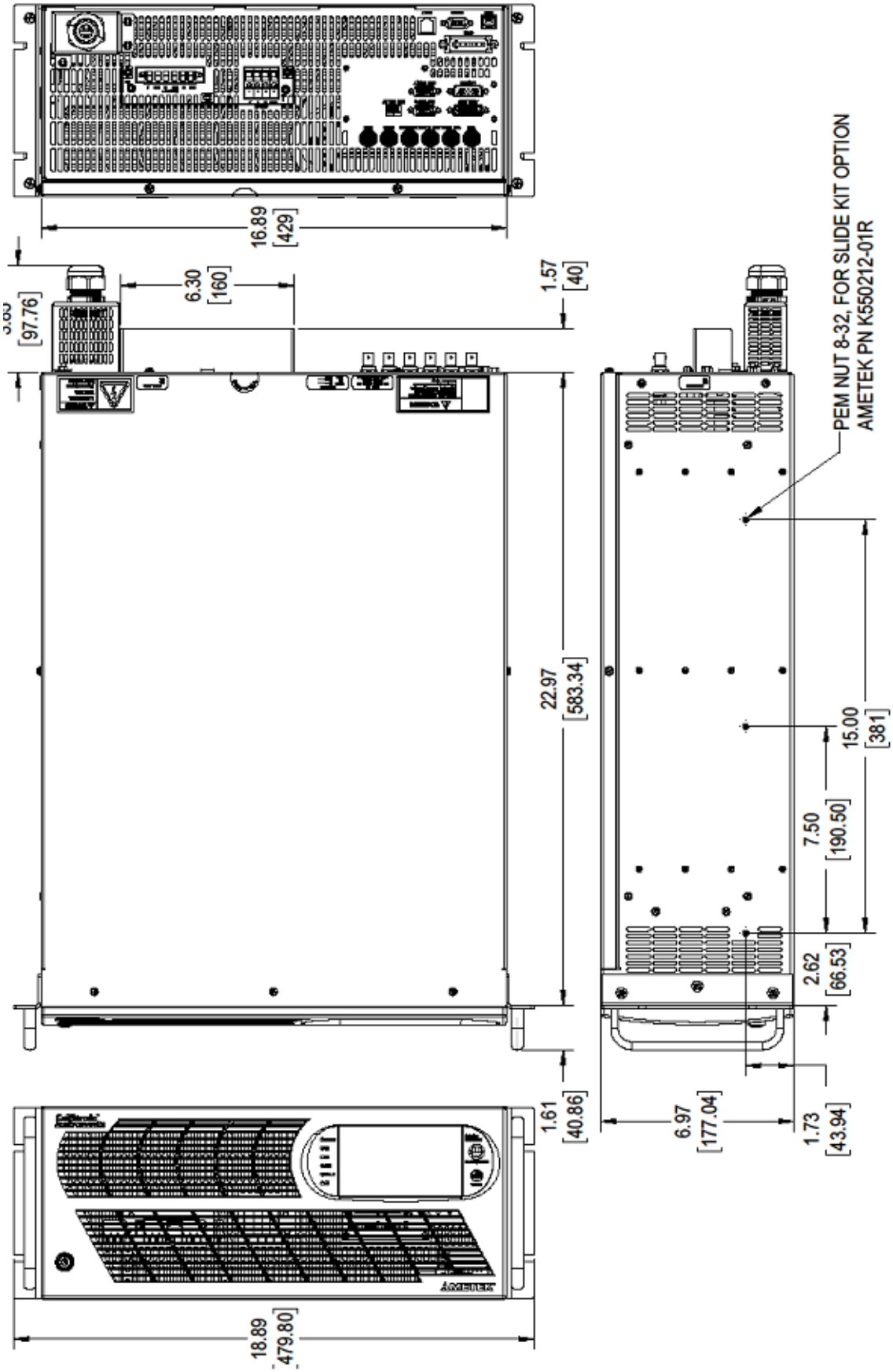

Options & Order Information (non-ASC versions)

AST 1501 A 1 B - E 0 0 0A 0A

VA (/10) & Phase(s)

A = Standard
B = Low Noise Fan *
C = No Casters **

# of Chassis

Input Voltage
B = Universal 90-264 VAC, For base models up to 3 kVA only.
C = 180-264 VAC, 3-Phase L-L (3-wire + Ground), 4.5 kVA to 18 kVA base models only.
D = 342-457 VAC, 3-Phase L-L (4-wire + Ground), 4.5 kVA to 18 kVA base models only.

Front Panel
E = Enhanced
A = ATE

GPIB Option
0 = None
1 = GPIB
2 = GPIB – MC

Avionics Options
0 = None
1 = B787
2 = AMD
3 = B787 & AMD
4 = AVSTD
5 = AVALL
6 = B787 - MC
7 = AMD - MC
8 = B787 & AMD - MC
9 = AVSTD – MC
A = AVALL – MC
B = AVSTD & B787
C = AVSTD & AMD
D = AVSTD & B787 – MC
E = AVSTD & AMD - MC

Additional Options
0A = None
1A = 411
1B = 413
1C = MB
1D = 411 – MC
1E = 413 – MC
1F = 1399
1G = 1399 - MC
2A = 411 & 413
2B = MB & 411
2C = MB & 413
2D = 411 & 413 – MC
2E = MB & 411 – MC
2F = MB & 413 – MC
2G = 411 & 1399
2H = 413 & 1399
2I = MB & 1399
2J = 411 & 1399 – MC
2K = 413 & 1399 – MC
2L = MB & 1399 – MC
3A = MB & 411 & 413
3B = MB & 411 & 413 – MC
3C = MB & 411 & 1399
3D = MB & 411 & 1399 – MC
3E = MB & 413 & 1399
3F = MB & 413 & 1399 – MC
3G = 411 & 413 & 1399
3H = 411 & 413 & 1399 – MC
4A = MB & 411 & 413 & 1399
4B = MB & 411 & 413 & 1399 – MC

Freq. & Clock Lock Options
0A = None
1A = HF
1B = LF
1C = FC
1D = LKM
1E = LKS
2A = HF & FC
2B = HF & LKM
2C = HF & LKS
2D = LF & LKM
2E = LF & LKS
2F = FC & LKM
2G = FC & LKS
3A = HF & FC & LKM
3B = HF & FC & LKS

* Low noise fan available for 500 VA, 750 VA, and 1500 VA single-phase 1U models only.
** Removal of casters applicable to 12 kVA and 18 kVA 14U models only.

Options and model descriptions:

Base Models	# of chassis	Phase(s) Out	Description	Size
AST0501A1	1	1	Programmable 500VA, 1 Phase, Dual Voltage Range	1U
AST0751A1	1	1	Programmable 750VA, 1 Phase, Dual Voltage Range	1U
AST1501A1	1	1	Programmable 1500VA, 1 Phase, Dual Voltage Range	1U
AST3001A1	1	1	Programmable 3000VA, 1 Phase, Dual Voltage Range	2U
AST1503A1	1	1 or 3	Programmable 1500VA, 1/3 Phase, Dual Voltage Range	2U
AST2253A1	1	1 or 3	Programmable 2250VA, 1/3 Phase, Dual Voltage Range	2U
AST3003A1	1	1 or 3	Programmable 3000VA, 1/3 Phase, Dual Voltage Range	2U
AST4503A1	1	1 or 3	Programmable 4500VA, 1/3 Phase, Dual Voltage Range	4U
AST6003A1	1	1 or 3	Programmable 6000VA, 1/3 Phase, Dual Voltage Range	4U
AST12K3A1	1	1 or 3	Programmable 12000VA, 1/3 Phase, Dual Voltage Range	14U
AST18K3A1	1	1 or 3	Programmable 18000VA, 1/3 Phase, Dual Voltage Range	14U
Multi-Chassis (MC) Packages	**# of chassis**	**Phase(s) Out**	**Description**	
AST1001A2[1,2]	2	1	Programmable 1000VA, 1 Phase (includes two AST0501A1)	
AST4501A3[1,2]	3	1	Programmable 4500VA, 1 Phase (includes three AST1501A1)	
AST9003A2[1,2]	2	1 or 3	Programmable 9000VA, 1/3 Phase (includes two AST4503A1)	
AST12K3A2[1,2]	2	1 or 3	Programmable 12000VA, 1/3 Phase (includes two AST6003A1)	
AST18K3A3[1,2]	3	1 or 3	Programmable 18000VA, 1/3 Phase (includes three AST6003A1)	
Consult factory for higher power and/or additional phase configurations				
[1] ATE version Multi-Chassis Packages include all ATE version chassis. Any chassis can be the master. One Parallel Communication System Interface Cable (PN: 890-010-26) is included for each non-master chassis.				
[2] Enhanced Version Multi-Chassis Packages include one Enhanced version chassis as the master. The remaining chassis are ATE version. For all Enhanced version chassis see "MB" option. One Parallel Communication System Interface Cable (PN: 890-010-26) is included for each non-master chassis.				

Options & Order Information (ASC versions)

ASC 6003 A 1 C - E 0 0 0A 0A

VA (/10) & Phase(s)

A = Standard
C = No Casters **

Input Voltage
C = 180-264VAC, 3-Phase L-L (3-wire + Ground)
D = 342-457VAC, 3-Phase L-L (4-wire + Ground)

GPIB Option
0 = None
1 = GPIB

Freq. & Clock Lock Options
0A = None
1A = HF
1B = LF
1C = FC
1D = LKM
1E = LKS
2A = HF & FC
2B = HF & LKM
2C = HF & LKS
2D = LF & LKM
2E = LF & LKS
2F = FC & LKM
2G = FC & LKS
3A = HF & FC & LKM
3B = HF & FC & LKS

Additional Options
0A = None
1A = 411
1H = ADV
2M = 411 & ADV
2N = 413 & ADV
3I = 411 & 413 & ADV

** Removal of casters applicable to 12 kVA and 18 kVA 14U models only.

Options and model descriptions:

Base Models	# of chassis	Phase(s) Out	Description	Size
ASC4503A1	1	1 or 3	Programmable 4500VA, 1/3 Phase, **312 V Dual Voltage Range, AC Output Only**	4U
ASC6003A1	1	1 or 3	Programmable 6000VA, 1/3 Phase, **312 V Dual Voltage Range, AC Output Only**	4U
ASC12K3A1	1	1 or 3	Programmable 12000VA, 1/3 Phase, **312 V Dual Voltage Range, AC Output Only**	14U
ASC18K3A1	1	1 or 3	Programmable 18000VA, 1/3 Phase, **312 V Dual Voltage Range, AC Output Only**	14U

ASC Model Notes:

- No DC output for ASC models. Voltage range up to 312 VAC.
- Harmonic measurements with arbitrary waveform generator is an optional feature (-ADV) on Asterion ASC models.
- Avionics test options and MIL-STD 1399 are not available on ASC models.
- Multi-chassis systems could be configured manually by customer. However, for multiple units, it is advised to sell the Asterion AST packages for best value.