Höcherl & Hackl
The electronic load

Application Note #9

Simple Battery Simulation with an electronic load

A battery simulation for DUTs which require a battery for a proper operation can be achieved with the aid of a system composed of a power supply and an electronic load.

Circuit concept

The power supply is connected to the electronic load in parallel via a decoupling diode. This system is stabilized with the aid of a buffer capacitor.
The voltage and current ranges of the power supply and the electronic load should be approximately equal to meet the ideal configuration.
The following circuit concept shows the setup of such a battery simulation system.

Functional principle

The output voltage of the power supply and the undervoltage protection of the electronic load are controlled via a common analog signal (0 ... 10V).
The electronic load must be driven in Constant Current mode. Through a corresponding portioning of the control voltage the output voltage of the power supply shall be slightly higher adjusted than the trigger voltage of the electronic Load. This voltage difference should be as small as possible but cross currents must be avoided as well.
In this way, by changing the control voltage several battery voltages can be simulated.

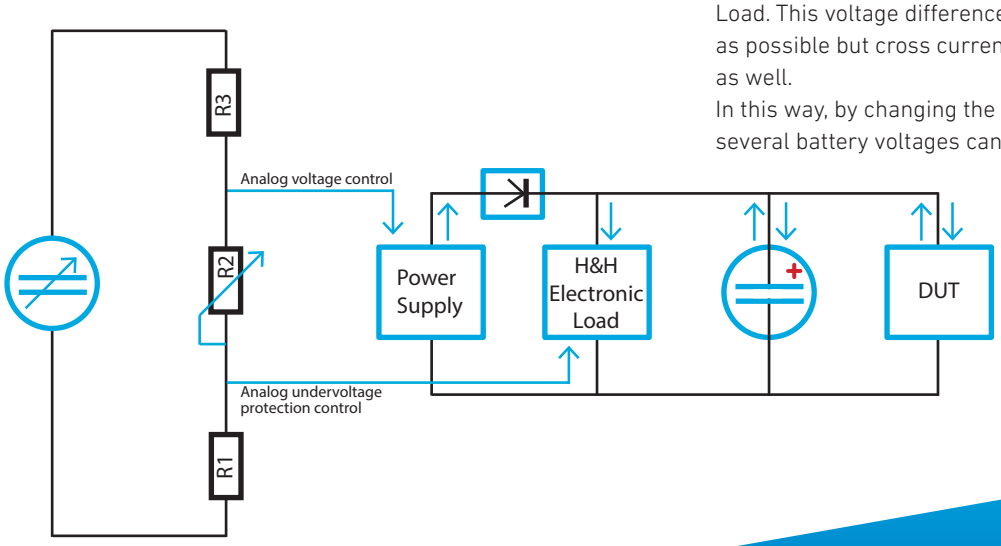

More applications at
www.hoecherl-hackl.com