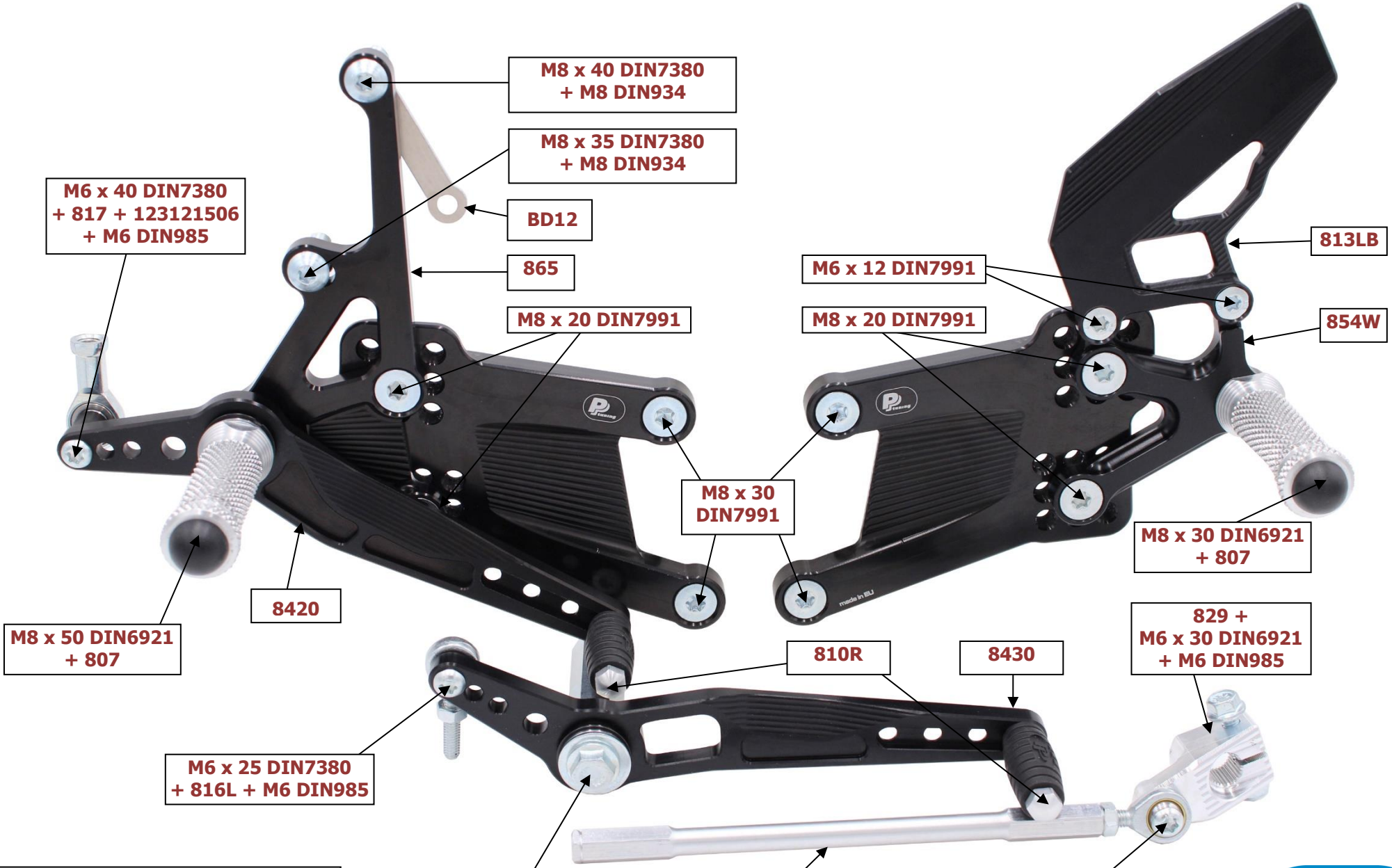

YAMAHA YZF600, R6
2003–2005
REVERSE SHIFTING
Part Nr. 7560

P tuning
Racing Parts