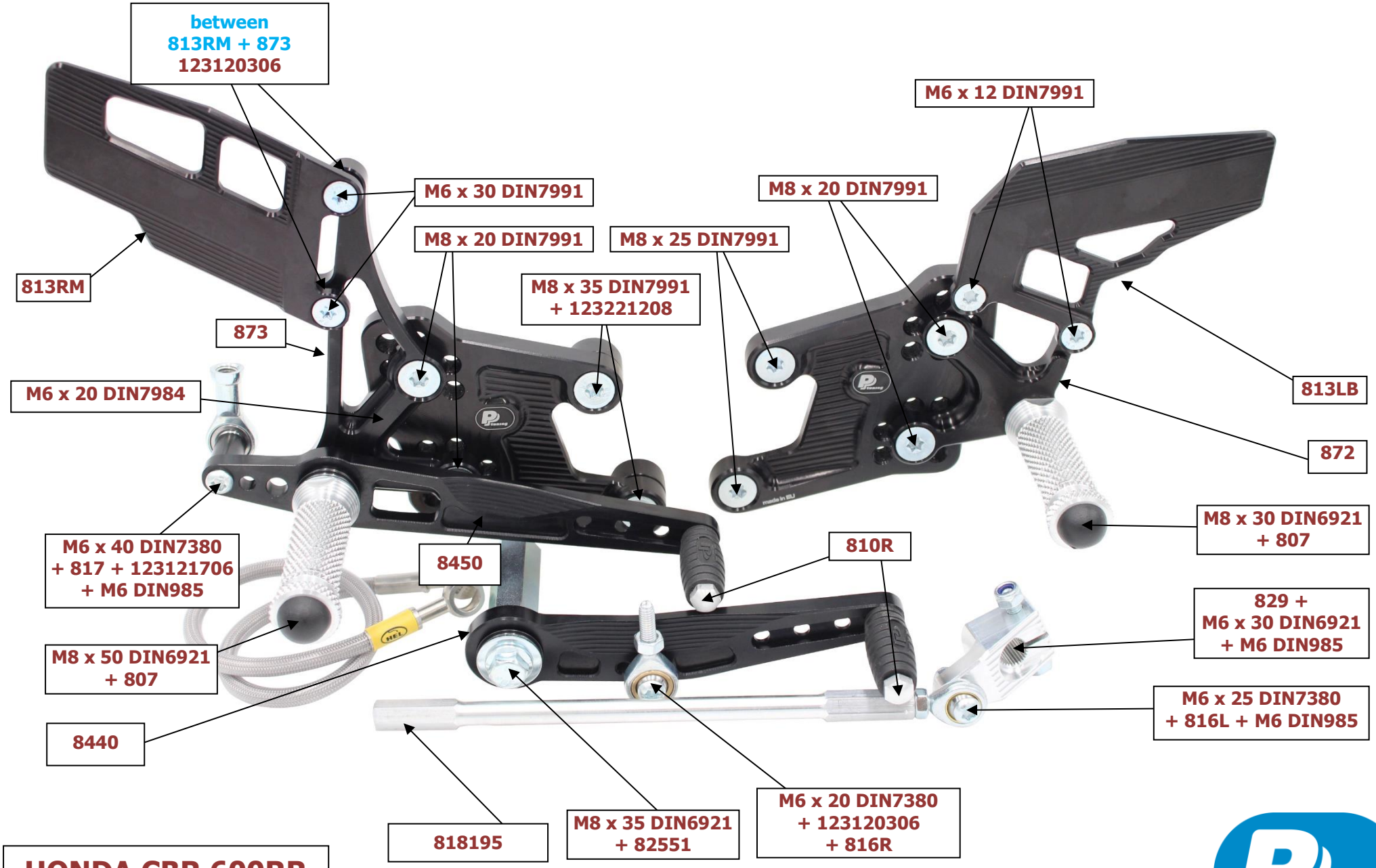

BRAKE HOSE 0°/ 440mm / 45°

HONDA CBR 600RR
2007–2023
Part Nr. 737

Racing Parts