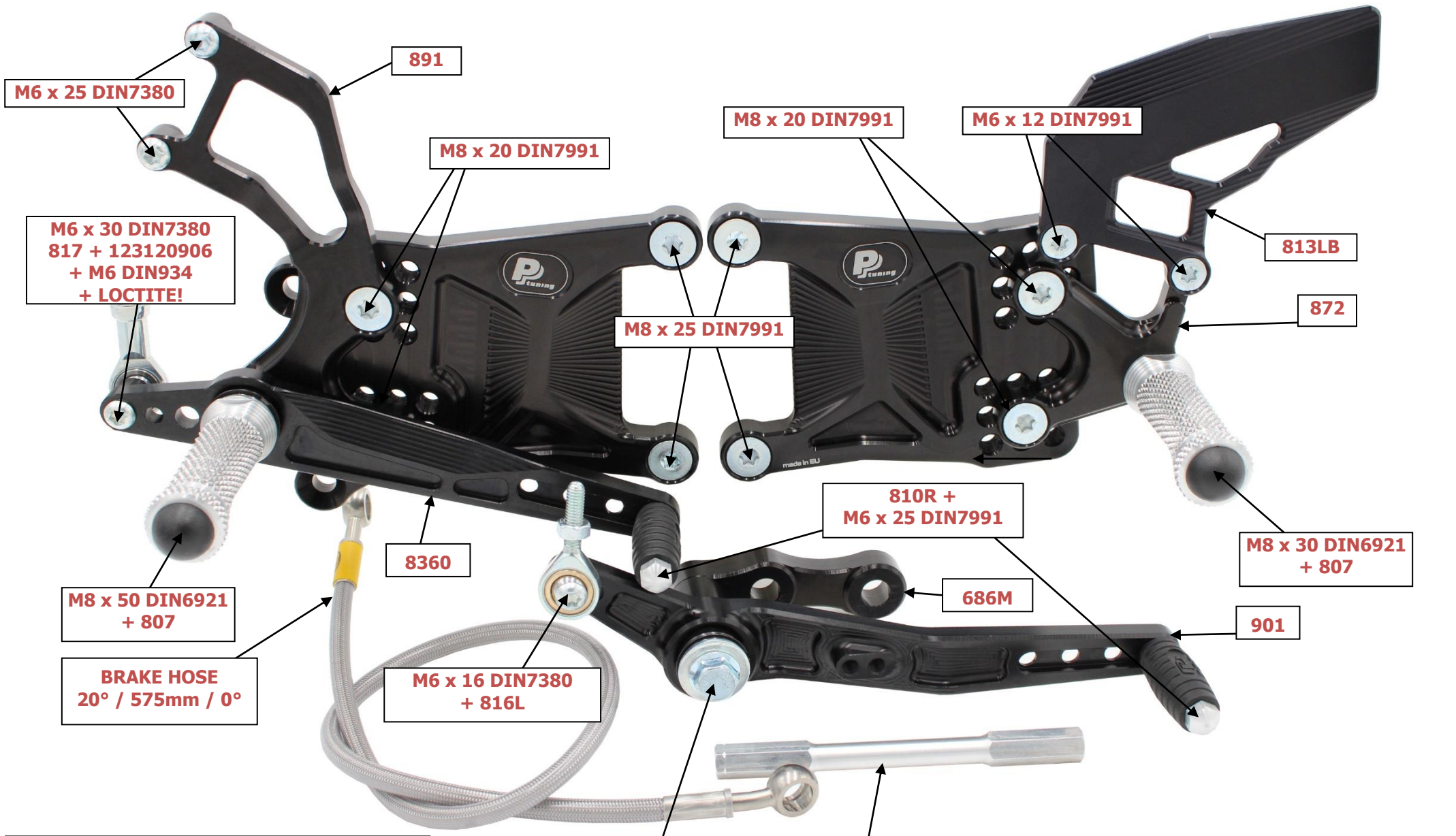

YAMAHA YZF-R1
2020 -
REVERSE SHIFTING
Part Nr. 6910

Racing Parts