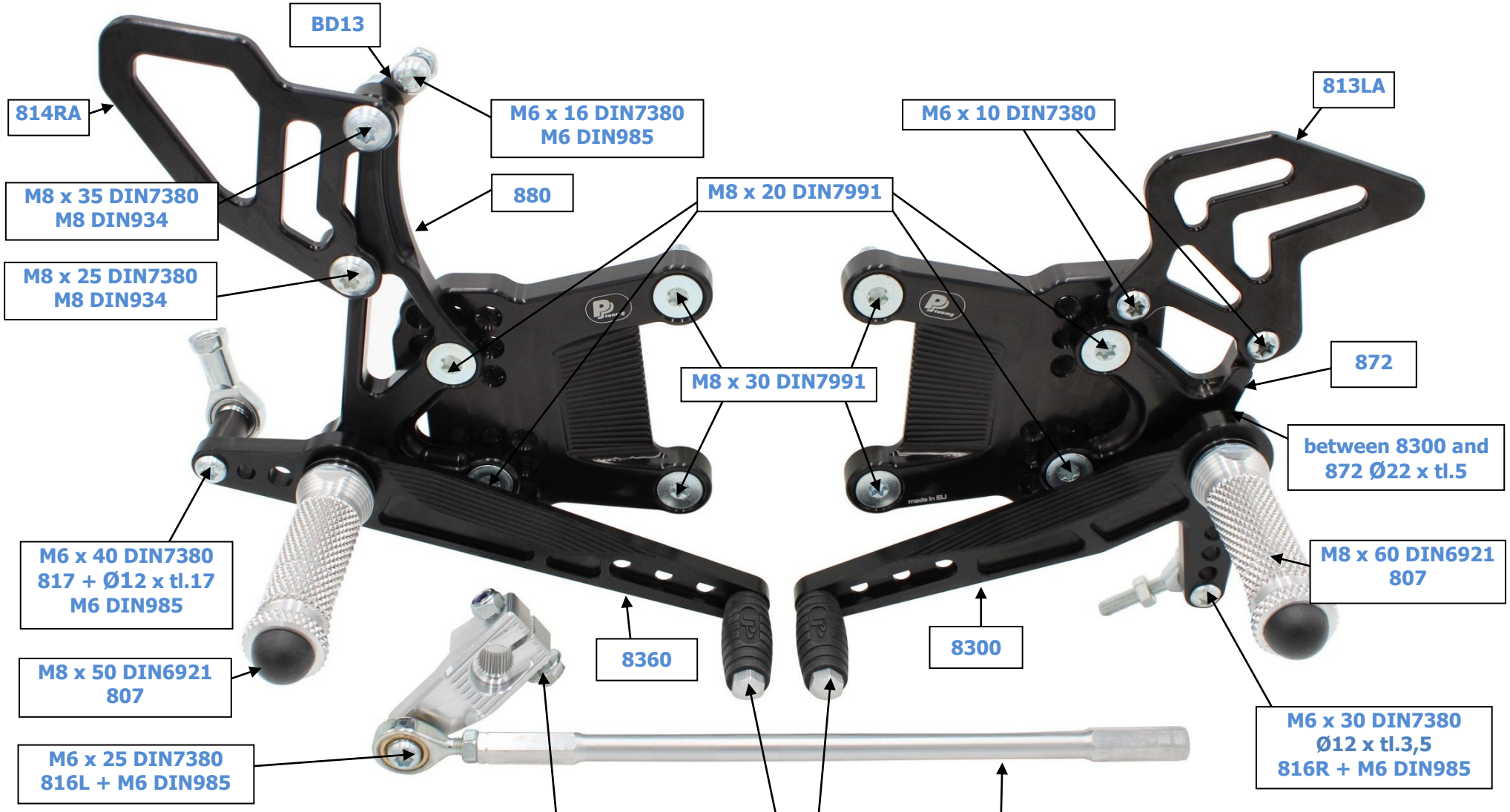

KAWASAKI ZX-10R
11-15
REVERSE SHIFTING
Part Nr. 6450

Racing Parts